Cambridge International AS & A Level

Cambridge International Examinations
Cambridge International Advanced Subsidiary and Advanced Level

CANDIDATE NAME									
CENTRE NUMBER						CANDIDATE NUMBER			

6225966884

PHYSICS **9702/22**

Paper 2 AS Level Structured Questions **May/June 2016**

1 hour 15 minutes

Candidates answer on the Question Paper.

No Additional Materials are required.

READ THESE INSTRUCTIONS FIRST

Write your Centre number, candidate number and name on all the work you hand in.
Write in dark blue or black pen.
You may use an HB pencil for any diagrams or graphs.
Do not use staples, paper clips, glue or correction fluid.
DO **NOT** WRITE IN ANY BARCODES.

Answer **all** questions.

Electronic calculators may be used.
You may lose marks if you do not show your working or if you do not use appropriate units.

At the end of the examination, fasten all your work securely together.
The number of marks is given in brackets [ ] at the end of each question or part question.

DC (LEG/FD) 108391/3
© UCLES 2016

Data

speed of light in free space	$c = 3.00 \times 10^{8}\,\text{m s}^{-1}$
permeability of free space	$\mu_0 = 4\pi \times 10^{-7}\,\text{H m}^{-1}$
permittivity of free space	$\varepsilon_0 = 8.85 \times 10^{-12}\,\text{F m}^{-1}$
	$(\frac{1}{4\pi\varepsilon_0} = 8.99 \times 10^{9}\,\text{m F}^{-1})$
elementary charge	$e = 1.60 \times 10^{-19}\,\text{C}$
the Planck constant	$h = 6.63 \times 10^{-34}\,\text{J s}$
unified atomic mass unit	$1\,\text{u} = 1.66 \times 10^{-27}\,\text{kg}$
rest mass of electron	$m_e = 9.11 \times 10^{-31}\,\text{kg}$
rest mass of proton	$m_p = 1.67 \times 10^{-27}\,\text{kg}$
molar gas constant	$R = 8.31\,\text{J K}^{-1}\,\text{mol}^{-1}$
the Avogadro constant	$N_A = 6.02 \times 10^{23}\,\text{mol}^{-1}$
the Boltzmann constant	$k = 1.38 \times 10^{-23}\,\text{J K}^{-1}$
gravitational constant	$G = 6.67 \times 10^{-11}\,\text{N m}^2\,\text{kg}^{-2}$
acceleration of free fall	$g = 9.81\,\text{m s}^{-2}$

© UCLES 2016

Formulae

uniformly accelerated motion	$s = ut + \frac{1}{2}at^2$ $v^2 = u^2 + 2as$
work done on/by a gas	$W = p\Delta V$
gravitational potential	$\phi = -\frac{Gm}{r}$
hydrostatic pressure	$p = \rho gh$
pressure of an ideal gas	$p = \frac{1}{3}\frac{Nm}{V}\langle c^2 \rangle$
simple harmonic motion	$a = -\omega^2 x$
velocity of particle in s.h.m.	$v = v_0 \cos \omega t$ $v = \pm \omega \sqrt{(x_0^2 - x^2)}$
Doppler effect	$f_o = \frac{f_s v}{v \pm v_s}$
electric potential	$V = \frac{Q}{4\pi\varepsilon_0 r}$
capacitors in series	$1/C = 1/C_1 + 1/C_2 + \ldots$
capacitors in parallel	$C = C_1 + C_2 + \ldots$
energy of charged capacitor	$W = \frac{1}{2}QV$
electric current	$I = Anvq$
resistors in series	$R = R_1 + R_2 + \ldots$
resistors in parallel	$1/R = 1/R_1 + 1/R_2 + \ldots$
Hall voltage	$V_H = \frac{BI}{ntq}$
alternating current/voltage	$x = x_0 \sin \omega t$
radioactive decay	$x = x_0 \exp(-\lambda t)$
decay constant	$\lambda = \frac{0.693}{t_{\frac{1}{2}}}$

© UCLES 2016

[Turn over

Answer **all** the questions in the spaces provided.

1 **(a)** Define *acceleration*.

.....

.....[1]

(b) A man travels on a toboggan down a slope covered with snow from point A to point B and then to point C. The path is illustrated in Fig. 1.1.

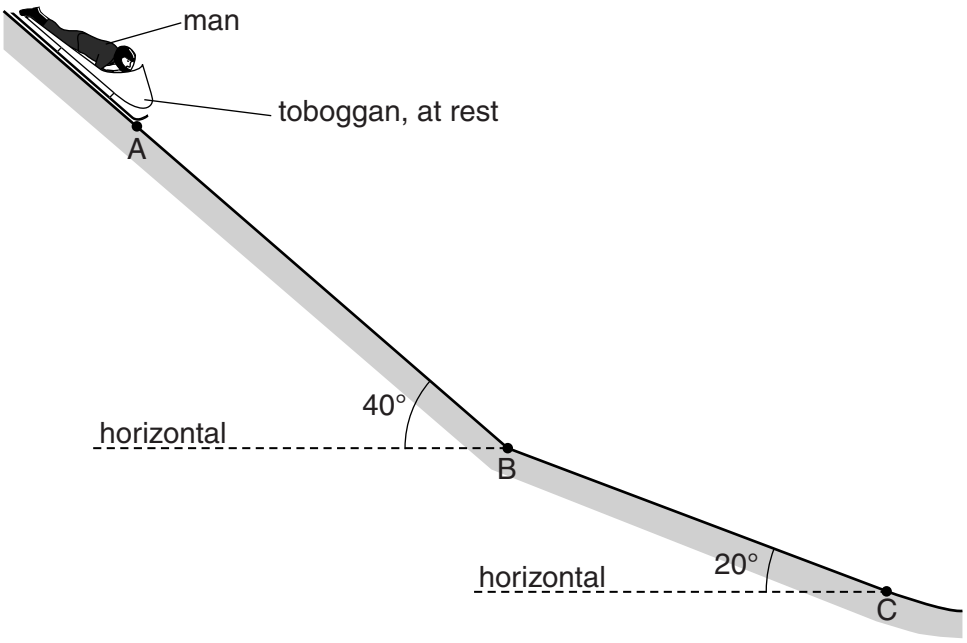

Fig. 1.1 (not to scale)

The slope AB makes an angle of 40° with the horizontal and the slope BC makes an angle of 20° with the horizontal. Friction is not negligible.

The man and toboggan have a combined mass of 95 kg.

The man starts from rest at A and has constant acceleration between A and B. The man takes 19 s to reach B. His speed is 36 m s^{-1} at B.

(i) Calculate the acceleration from A to B.

acceleration = ... m s^{-2} [2]

(ii) Show that the distance moved from A to B is 340 m.

[1]

© UCLES 2016

(iii) For the man and toboggan moving from A to B, calculate

1. the change in kinetic energy,

change in kinetic energy = ... J [2]

2. the change in potential energy.

change in potential energy = ... J [2]

(iv) Use your answers in **(iii)** to determine the average frictional force that acts on the toboggan between A and B.

frictional force = ... N [2]

(v) A parachute opens on the toboggan as it passes point B. There is a constant deceleration of $3.0\,m\,s^{-2}$ from B to C.

Calculate the frictional force that produces this deceleration between B and C.

frictional force = ... N [2]

[Total: 12]

© UCLES 2016

[Turn over

2 **(a)** Fig. 2.1 shows a liquid in a cylindrical container.

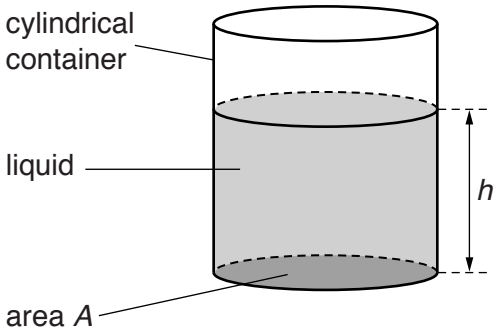

Fig. 2.1

The cross-sectional area of the container is A. The height of the column of liquid is h and the density of the liquid is ρ.

Show that the pressure p due to the liquid on the base of the cylinder is given by

$$p = \rho g h.$$

[3]

(b) The variation with height h of the total pressure P on the base of the cylinder in **(a)** is shown in Fig. 2.2.

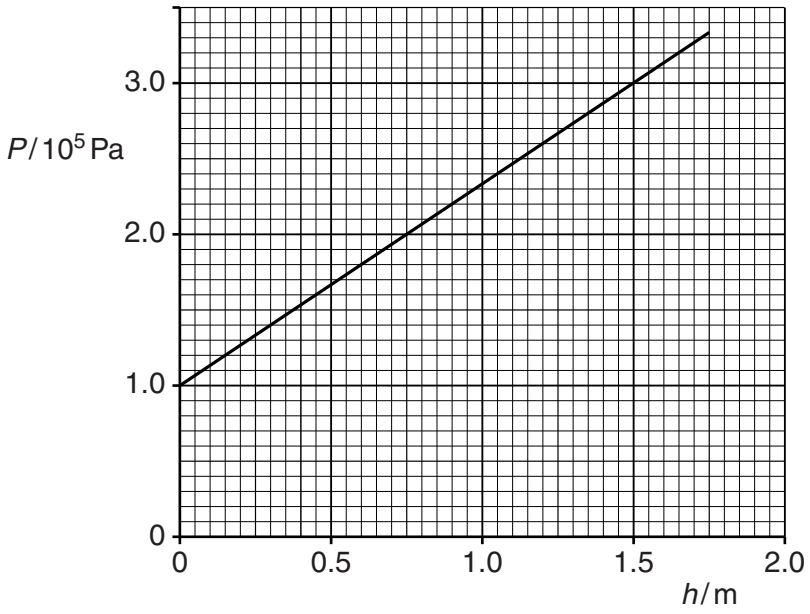

Fig. 2.2

(i) Explain why the line of the graph in Fig. 2.2 does not pass through the origin (0,0).

.....

.....[1]

(ii) Use data from Fig. 2.2 to calculate the density of the liquid in the cylinder.

density = ... $kg\,m^{-3}$ [2]

[Total: 6]

© UCLES 2016

[Turn over

3 **(a)** Define the *Young modulus*.

.....

.....[1]

(b) The Young modulus of steel is 1.9×10^{11} Pa. The Young modulus of copper is 1.2×10^{11} Pa.

A steel wire and a copper wire each have the same cross-sectional area and length. The two wires are each extended by equal forces.

(i) Use the definition of the Young modulus to determine the ratio

$$\frac{\text{extension of the copper wire}}{\text{extension of the steel wire}} .$$

ratio = ...[3]

(ii) The two wires are each extended by a force. Both wires obey Hooke's law.

On Fig. 3.1, sketch a graph for each wire to show the variation with extension of the force.

Label the line for steel with the letter **S** and the line for copper with the letter **C**.



Fig. 3.1

[1]

[Total: 5]

© UCLES 2016

4 **(a)** By reference to the direction of the propagation of energy, state what is meant by a *longitudinal* wave and by a *transverse* wave.

longitudinal: .....

.....

.....

transverse: .....

.....

.....

[2]

(b) The intensity of a sound wave passing through air is given by

$$I = Kv\rho f^2 A^2$$

where I is the intensity (power per unit area),
K is a constant without units,
v is the speed of sound,
ρ is the density of air,
f is the frequency of the wave
and A is the amplitude of the wave.

Show that both sides of the equation have the same SI base units.

[3]

(c) **(i)** Describe the *Doppler effect*.

.....

.....[1]

(ii) A distant star is moving away from a stationary observer.

State the effect of the motion on the light observed from the star.

.....

.....

.....[1]

(d) A car travels at a constant speed towards a stationary observer. The horn of the car sounds at a frequency of 510 Hz and the observer hears a frequency of 550 Hz. The speed of sound in air is 340 $m\,s^{-1}$.

Calculate the speed of the car.

speed = ... $m\,s^{-1}$ [3]

[Total: 10]

© UCLES 2016

5 **(a)** Light of a single wavelength is incident on a diffraction grating. Explain the part played by *diffraction* and *interference* in the production of the first order maximum by the diffraction grating.

diffraction: .....

.....

interference: .....

.....

.....

.....

[3]

(b) The diffraction grating illustrated in Fig. 5.1 is used with light of wavelength 486 nm.

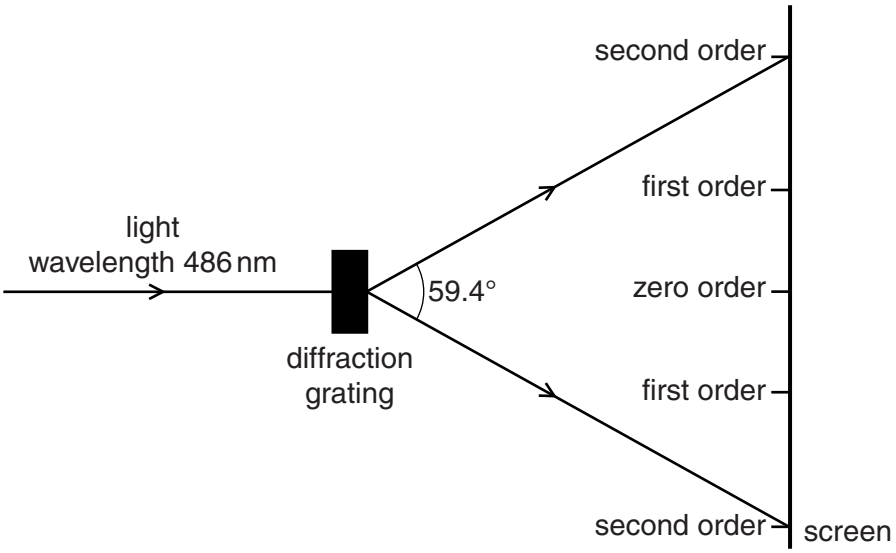

Fig. 5.1 (not to scale)

The orders of the maxima produced are shown on the screen in Fig. 5.1. The angle between the two second order maxima is 59.4°.

Calculate the number of lines per millimetre of the grating.

number of lines per millimetre = ... mm^{-1} [3]

[Total: 6]

BLANK PAGE

© UCLES 2016

6 Two parallel vertical metal plates are connected to a power supply, as shown in Fig. 6.1.

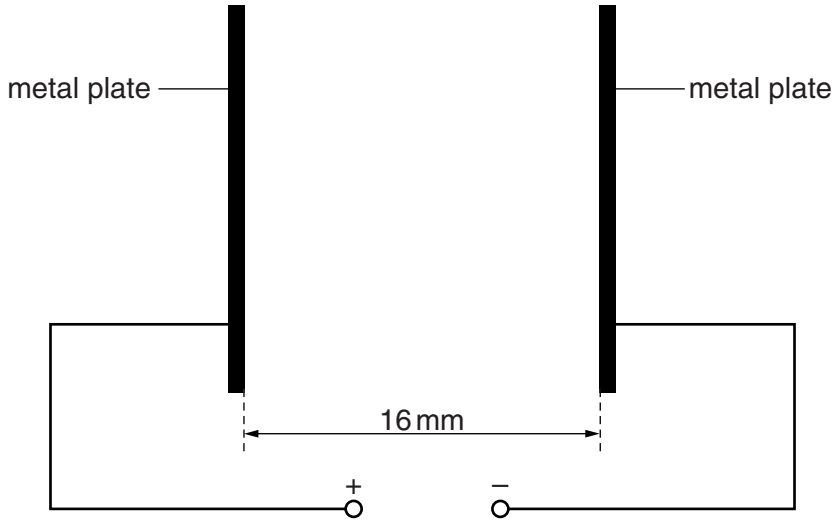

Fig. 6.1

The separation of the plates is 16 mm.

(a) On Fig. 6.1, draw at least six field lines to represent the electric field between the plates. [1]

(b) An α-particle travels in a vacuum between the two plates.

The electric field does work on the α-particle. The gain in kinetic energy of the α-particle is 15 keV.

Calculate the electric field strength between the plates.

electric field strength = ... $V\,m^{-1}$ [4]

[Total: 5]

© UCLES 2016

[Turn over

7 **(a)** Electric current is a flow of charge carriers. The charge on the carriers is quantised. Explain what is meant by *quantised*.

.....[1]

(b) A battery of electromotive force (e.m.f.) 9.0 V and internal resistance 0.25 Ω is connected in series with two identical resistors X and a resistor Y, as shown in Fig. 7.1.

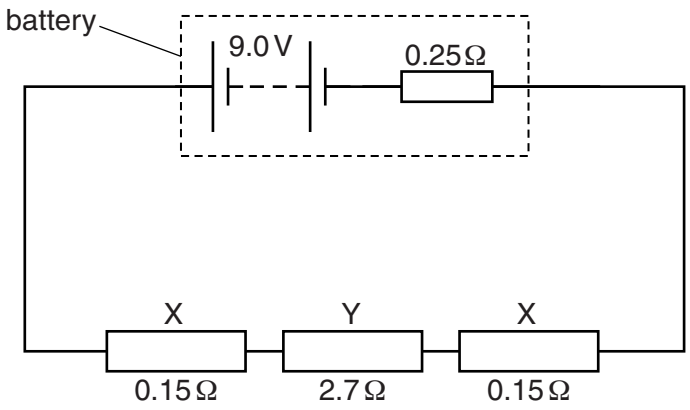

Fig. 7.1

The resistance of each resistor X is 0.15 Ω and the resistance of resistor Y is 2.7 Ω.

(i) Show that the current in the circuit is 2.8 A.

[3]

(ii) Calculate the potential difference across the battery.

potential difference = ... V [2]

© UCLES 2016

(c) Each resistor X connected in the circuit in **(b)** is made from a wire with a cross-sectional area of 2.5 mm^2. The number of free electrons per unit volume in the wire is $8.5 \times 10^{29} m^{-3}$.

(i) Calculate the average drift speed of the electrons in X.

drift speed = ... $m s^{-1}$ [2]

(ii) The two resistors X are replaced by two resistors Z made of the same material and length but with half the diameter.

Describe and explain the difference between the average drift speed in Z and that in X.

.....

.....

.....

.....[2]

[Total: 10]

8 **(a)** State the name of the class (group) to which each of the following belongs:

electron .....

neutron .....

neutrino .....

proton .....

[2]

(b) A proton may decay into a neutron together with two other particles.

(i) Complete the following to give an equation that represents this proton decay.

$$^{1}_{1}p \rightarrow \text{.....}^{\text{.....}}_{\text{.....}}n + \text{.....}^{\text{.....}}_{\text{.....}} + \text{.....}^{\text{.....}}_{\text{.....}}$$

[2]

(ii) Write an equation for this decay in terms of quark composition.

[1]

(iii) State the name of the force responsible for this decay.

.....[1]

[Total: 6]

Permission to reproduce items where third-party owned material protected by copyright is included has been sought and cleared where possible. Every reasonable effort has been made by the publisher (UCLES) to trace copyright holders, but if any items requiring clearance have unwittingly been included, the publisher will be pleased to make amends at the earliest possible opportunity.

To avoid the issue of disclosure of answer-related information to candidates, all copyright acknowledgements are reproduced online in the Cambridge International Examinations Copyright Acknowledgements Booklet. This is produced for each series of examinations and is freely available to download at www.cie.org.uk after the live examination series.

Cambridge International Examinations is part of the Cambridge Assessment Group. Cambridge Assessment is the brand name of University of Cambridge Local Examinations Syndicate (UCLES), which is itself a department of the University of Cambridge.